Assembly of Subsystem Matrices
Revision B

By Tom Irvine
Email: tom@irvinemail.org

August 16, 2012

The assembly method is demonstrated by an example.

The diagram of the sample system is shown in Figure 1.

The mass and stiffness matrices are shown on the following pages.

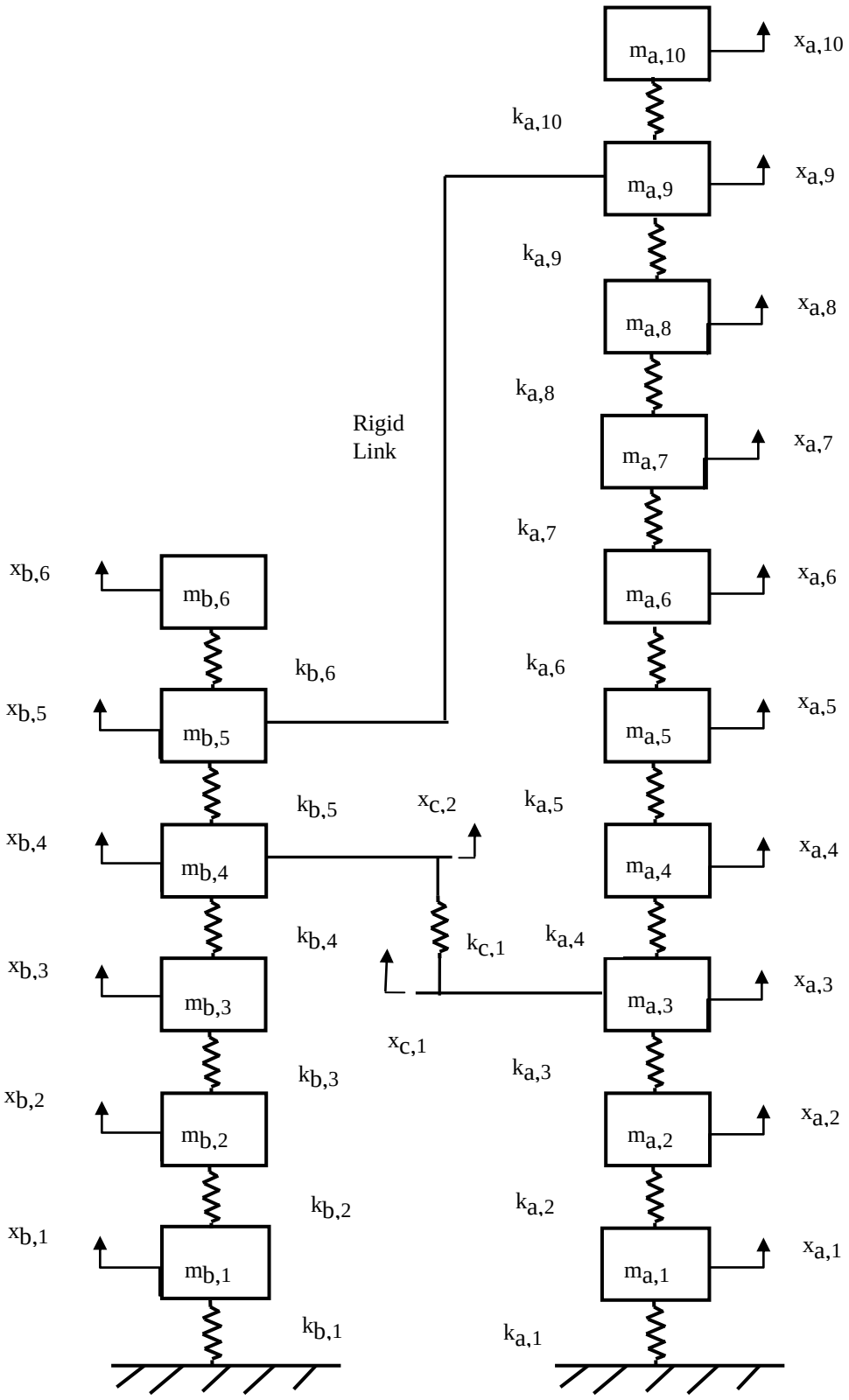
$m_{a,10}$
$x_{a,10}$
$k_{a,10}$
$m_{a,9}$
$x_{a,9}$
$k_{a,9}$
$m_{a,8}$
$x_{a,8}$
$k_{a,8}$
Rigid
Link
$m_{a,7}$
$x_{a,7}$
$k_{a,7}$
$x_{b,6}$
$m_{b,6}$
$m_{a,6}$
$x_{a,6}$
$k_{b,6}$
$k_{a,6}$
$x_{b,5}$
$m_{b,5}$
$m_{a,5}$
$x_{a,5}$
$k_{b,5}$
$x_{c,2}$
$k_{a,5}$
$x_{b,4}$
$m_{b,4}$
$m_{a,4}$
$x_{a,4}$
$k_{b,4}$
$k_{c,1}$
$k_{a,4}$
$x_{b,3}$
$m_{b,3}$
$m_{a,3}$
$x_{a,3}$
$x_{c,1}$
$k_{b,3}$
$k_{a,3}$
$x_{b,2}$
$m_{b,2}$
$m_{a,2}$
$x_{a,2}$
$k_{b,2}$
$k_{a,2}$
$x_{b,1}$
$m_{b,1}$
$m_{a,1}$
$x_{a,1}$
$k_{b,1}$
$k_{a,1}$

Figure 1.

$$M_a = \begin{bmatrix} m_{a,1} & 0 & 0 & 0 & 0 & 0 & 0 & 0 & 0 & 0 \\ 0 & m_{a,2} & 0 & 0 & 0 & 0 & 0 & 0 & 0 & 0 \\ 0 & 0 & m_{a,3} & 0 & 0 & 0 & 0 & 0 & 0 & 0 \\ 0 & 0 & 0 & m_{a,4} & 0 & 0 & 0 & 0 & 0 & 0 \\ 0 & 0 & 0 & 0 & m_{a,5} & 0 & 0 & 0 & 0 & 0 \\ 0 & 0 & 0 & 0 & 0 & m_{a,6} & 0 & 0 & 0 & 0 \\ 0 & 0 & 0 & 0 & 0 & 0 & m_{a,7} & 0 & 0 & 0 \\ 0 & 0 & 0 & 0 & 0 & 0 & 0 & m_{a,8} & 0 & 0 \\ 0 & 0 & 0 & 0 & 0 & 0 & 0 & 0 & m_{a,9} & 0 \\ 0 & 0 & 0 & 0 & 0 & 0 & 0 & 0 & 0 & m_{a,10} \end{bmatrix}$$

$$M_b = \begin{bmatrix} m_{b,1} & 0 & 0 & 0 & 0 & 0 \\ 0 & m_{b,2} & 0 & 0 & 0 & 0 \\ 0 & 0 & m_{b,3} & 0 & 0 & 0 \\ 0 & 0 & 0 & m_{b,4} & 0 & 0 \\ 0 & 0 & 0 & 0 & m_{b,5} & 0 \\ 0 & 0 & 0 & 0 & 0 & m_{b,6} \end{bmatrix}$$

$$M_c = \begin{bmatrix} 0 & 0 \\ 0 & 0 \end{bmatrix}$$

$K_a =$

$$\begin{bmatrix} k_{a,1}+k_{a,2} & -k_{a,2} & 0 & 0 & 0 & 0 & 0 & 0 & 0 & 0 \\ -k_{a,2} & k_{a,2}+k_{a,3} & -k_{a,3} & 0 & 0 & 0 & 0 & 0 & 0 & 0 \\ 0 & -k_{a,3} & k_{a,3}+k_{a,4} & -k_{a,4} & 0 & 0 & 0 & 0 & 0 & 0 \\ 0 & 0 & -k_{a,4} & k_{a,4}+k_{a,5} & -k_{a,5} & 0 & 0 & 0 & 0 & 0 \\ 0 & 0 & 0 & -k_{a,5} & k_{a,5}+k_{a,6} & -k_{a,6} & 0 & 0 & 0 & 0 \\ 0 & 0 & 0 & 0 & -k_{a,6} & k_{a,6}+k_{a,7} & -k_{a,7} & 0 & 0 & 0 \\ 0 & 0 & 0 & 0 & 0 & -k_{a,7} & k_{a,7}+k_{a,8} & -k_{a,8} & 0 & 0 \\ 0 & 0 & 0 & 0 & 0 & 0 & -k_{a,8} & k_{a,8}+k_{a,9} & -k_{a,9} & 0 \\ 0 & 0 & 0 & 0 & 0 & 0 & 0 & -k_{a,9} & k_{a,9}+k_{a,10} & -k_{a,10} \\ 0 & 0 & 0 & 0 & 0 & 0 & 0 & 0 & -k_{a,10} & k_{a,10} \end{bmatrix}$$

$$K_b = \begin{bmatrix} k_{b,1} + k_{b,2} & -k_{b,2} & 0 & 0 & 0 & 0 \\ -k_{b,2} & k_{b,2} + k_{b,3} & -k_{b,3} & 0 & 0 & 0 \\ 0 & -k_{b,3} & k_{b,3} + k_{b,4} & -k_{b,4} & 0 & 0 \\ 0 & 0 & -k_{b,4} & k_{b,4} + k_{b,5} & -k_{b,5} & 0 \\ 0 & 0 & 0 & -k_{b,5} & k_{b,5} + k_{b,6} & -k_{b,6} \\ 0 & 0 & 0 & 0 & -k_{b,6} & k_{b,6} \end{bmatrix}$$

$$K_c = \begin{bmatrix} k_{c,1} & -k_{c,1} \\ -k_{c,1} & k_{c,1} \end{bmatrix}$$

The displacement mapping from local to global coordinates is

Local	Global
xa1	1
xa2	2
xa3	3
xa4	4
xa5	5
xa6	6
xa7	7
xa8	8
xa9	9
xa10	10
xb1	11
xb2	12
xb3	13
xb4	14
xb5	9
xb6	15
xc1	3
xc2	14

The transformation matrices are:

$T_a = \underline{I}$ (10 x 15 Identity matrix)

$$T_b = \begin{bmatrix} 0 & 0 & 0 & 0 & 0 & 0 & 0 & 0 & 0 & 0 & 1 & 0 & 0 & 0 & 0 \\ 0 & 0 & 0 & 0 & 0 & 0 & 0 & 0 & 0 & 0 & 0 & 1 & 0 & 0 & 0 \\ 0 & 0 & 0 & 0 & 0 & 0 & 0 & 0 & 0 & 0 & 0 & 0 & 1 & 0 & 0 \\ 0 & 0 & 0 & 0 & 0 & 0 & 0 & 0 & 0 & 0 & 0 & 0 & 0 & 1 & 0 \\ 0 & 0 & 0 & 0 & 0 & 0 & 0 & 0 & 1 & 0 & 0 & 0 & 0 & 0 & 0 \\ 0 & 0 & 0 & 0 & 0 & 0 & 0 & 0 & 0 & 0 & 0 & 0 & 0 & 0 & 1 \end{bmatrix}$$

$$T_c = \begin{bmatrix} 0 & 0 & 1 & 0 & 0 & 0 & 0 & 0 & 0 & 0 & 0 & 0 & 0 & 0 & 0 \\ 0 & 0 & 0 & 0 & 0 & 0 & 0 & 0 & 0 & 0 & 0 & 0 & 0 & 1 & 0 \end{bmatrix}$$

The global stiffness matrix is

$$K_G = T_A^T K_A T_A + T_B^T K_B T_B + T_C^T K_C T_C$$

The global mass matrix is

$$M_G = T_A^T M_A T_A + T_B^T M_B T_B + T_C^T M_C T_C$$

Sample Values

Dimensions: Mass (lbm) & Stiffness (lbf/in)

ka1	50000
ka2	45000
ka3	50000
ka4	35000
ka5	40000
ka6	20000
ka7	30000
ka8	25000
ka9	20000
ka10	10000

ma1	7
ma2	5
ma3	3
ma4	4
ma5	5
ma6	3
ma7	2
ma8	1
ma9	2
ma10	1

kb1	20000
kb2	25000
kb3	15000
kb4	20000
kb5	10000
kb6	5000

mb1	5
mb2	3
mb3	4
mb4	1
mb5	2
mb6	1

kc1	20000

Matlab Results

Script name: HW2.m

The Matlab results were compared

mode	Matlab fn(Hz)	Nastran fn(Hz)	Error
1	68.4	67.5	1.4%
2	155.2	133.5	14.0%
3	160.1	157.7	1.5%
4	218.6	215.2	1.5%
5	243.7	241.9	0.7%
6	271.2	261.3	3.6%
7	291.6	291.5	0.0%
8	371.8	371.8	0.0%
9	413.0	406.4	1.6%
10	431.0	428.7	0.6%
11	487.6	-	-
12	530.1	-	-
13	625.6	-	-
14	754.5	-	-
15	767.1	-	-

The error is referenced to the Matlab result.

The results show very good agreement except for the second mode. The reason for the 14% error in the second modal frequency is not immediately clear.

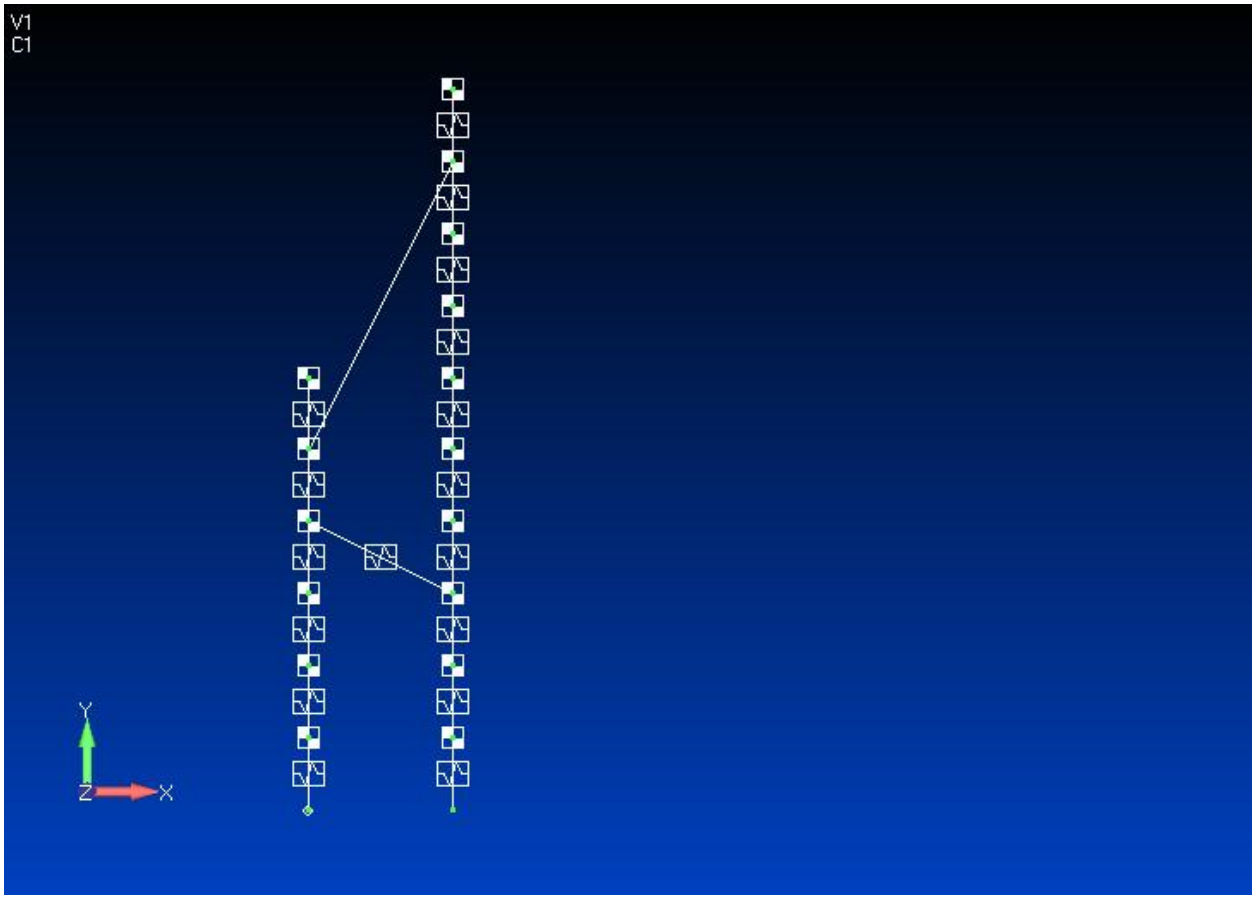

Figure 2. Nastran Model

The constrains are omitted for brevity.