MODAL TRANSIENT ANALYSIS OF A MULTI-DEGREE-OF-FREEDOM SYSTEM WITH ENFORCED MOTION

Revision C

By Tom Irvine
Email: tomirvine@aol.com

August 5, 2011

Variables

M	Mass matrix
K	Stiffness matrix
F	Applied forces
F_d	Forces at driven nodes
F_f	Forces at free nodes
I	Identity matrix
Π	Transformation matrix
u	Displacement vector
u_d	Displacements at driven nodes
u_f	Displacements at free nodes

The equation of motion for a multi-degree-of-freedom system is

$$[M][\ddot{u}]+[K][u]=F \tag{1}$$

$$[u]=\begin{bmatrix} u_d \\ u_f \end{bmatrix} \tag{2}$$

Partition the matrices and vectors as follows

$$\begin{bmatrix} M_{dd} & M_{df} \\ M_{fd} & M_{ff} \end{bmatrix} \begin{bmatrix} \ddot{u}_d \\ \ddot{u}_f \end{bmatrix} + \begin{bmatrix} K_{dd} & K_{df} \\ K_{fd} & K_{ff} \end{bmatrix} \begin{bmatrix} u_d \\ u_f \end{bmatrix} = \begin{bmatrix} F_d \\ F_f \end{bmatrix} \tag{3}$$

The equations of motions for enforced displacement and acceleration are given in Appendices A and B, respectively.

Create a transformation matrix such that

$$\begin{bmatrix} u_d \\ u_f \end{bmatrix} = \Pi \begin{bmatrix} u_d \\ u_w \end{bmatrix} \tag{4}$$

$$\Pi = \begin{bmatrix} I & 0 \\ T_1 & T_2 \end{bmatrix} \tag{5}$$

$$\begin{bmatrix} M_{dd} & M_{df} \\ M_{fd} & M_{ff} \end{bmatrix} \Pi \begin{bmatrix} \ddot{u}_d \\ \ddot{u}_w \end{bmatrix} + \begin{bmatrix} K_{dd} & K_{df} \\ K_{fd} & K_{ff} \end{bmatrix} \Pi \begin{bmatrix} u_d \\ u_w \end{bmatrix} = \begin{bmatrix} F_d \\ F_f \end{bmatrix} \tag{6}$$

Premultiply by Π^T,

$$\Pi^T \begin{bmatrix} M_{dd} & M_{df} \\ M_{fd} & M_{ff} \end{bmatrix} \Pi \begin{bmatrix} \ddot{u}_d \\ \ddot{u}_w \end{bmatrix} + \Pi^T \begin{bmatrix} K_{dd} & K_{df} \\ K_{fd} & K_{ff} \end{bmatrix} \Pi \begin{bmatrix} u_d \\ u_w \end{bmatrix} = \Pi^T \begin{bmatrix} F_d \\ F_f \end{bmatrix} \tag{7}$$

APPENDIX A

Enforced Displacement

Again, the partitioned equation of motion is

$$\Pi^T \begin{bmatrix} M_{dd} & M_{df} \\ M_{fd} & M_{ff} \end{bmatrix} \Pi \begin{bmatrix} \ddot{u}_d \\ \ddot{u}_w \end{bmatrix} + \Pi^T \begin{bmatrix} K_{dd} & K_{df} \\ K_{fd} & K_{ff} \end{bmatrix} \Pi \begin{bmatrix} u_d \\ u_w \end{bmatrix} = \Pi^T \begin{bmatrix} F_d \\ F_f \end{bmatrix} \tag{A-1}$$

Transform the equation of motion to uncouple the mass matrix so that the resulting mass matrix is

$$\begin{bmatrix} \hat{M}_{dd} & 0 \\ 0 & \hat{M}_{ww} \end{bmatrix} \tag{A-2}$$

Apply the transformation to the mass matrix

$$\Pi^T M \Pi = \begin{bmatrix} I & T_1^T \\ 0 & T_2^T \end{bmatrix} \begin{bmatrix} M_{dd} & M_{df} \\ M_{fd} & M_{ff} \end{bmatrix} \begin{bmatrix} I & 0 \\ T_1 & T_2 \end{bmatrix} \tag{A-3}$$

$$\Pi^T M \Pi = \begin{bmatrix} I & T_1^T \\ 0 & T_2^T \end{bmatrix} \begin{bmatrix} M_{dd} + M_{df} T_1 & M_{df} T_2 \\ M_{fd} + M_{ff} T_1 & M_{ff} T_2 \end{bmatrix} \tag{A-4}$$

$$\Pi^T M \Pi = \begin{bmatrix} M_{dd} + M_{df} T_1 + T_1^T (M_{fd} + M_{ff} T) & M_{df} T_2 + T_1^T M_{ff} T_2 \\ T_2^T (M_{fd} + M_{ff} T_1) & T_2^T (M_{ff} T_2) \end{bmatrix} \tag{A-5}$$

$$\Pi^T M \Pi = \begin{bmatrix} M_{dd} + M_{df} T_1 + T_1^T (M_{fd} + M_{ff} T_1) & \left(M_{df} + T_1^T M_{ff}\right) T_2 \\ T_2^T (M_{fd} + M_{ff} T_1) & T_2^T (M_{ff} T_2) \end{bmatrix} \tag{A-6}$$

$$\Pi^T M \Pi = \begin{bmatrix} M_{dd} + T_1^T M_{fd} + \left(M_{df} + T_1^T M_{ff}\right) T_1 & \left(M_{df} + T_1^T M_{ff}\right) T_2 \\ T_2^T (M_{fd} + M_{ff} T_1) & T_2^T (M_{ff} T_2) \end{bmatrix} \tag{A-7}$$

Let

$$T_2 = I \tag{A-8}$$

$$\Pi^T M \Pi = \begin{bmatrix} M_{dd} + T_1^T M_{fd} + \left(M_{df} + T_1^T M_{ff}\right) T_1 & \left(M_{df} + T_1^T M_{ff}\right) \\ (M_{fd} + M_{ff} T_1) & M_{ff} \end{bmatrix} = \begin{bmatrix} \hat{M}_{dd} & 0 \\ 0 & \hat{M}_{ww} \end{bmatrix} \tag{A-9}$$

$$M_{df} + T_1^T M_{ff} = 0 \tag{A-10}$$

$$T_1^T = -M_{df} M_{ff}^{-1} \tag{A-11}$$

$$T_1 = -M_{ff}^{-1} M_{fd} \tag{A-12}$$

The transformation matrix is

$$\Pi = \begin{bmatrix} I_{dd} & 0 \\ T_1 & I_{ff} \end{bmatrix} \tag{A-13}$$

$$\hat{M}_{dd} = M_{dd} + T_1^T M_{fd} + \left(M_{df} + T_1^T M_{ff}\right) T_1 \tag{A-14}$$

$$\hat{M}_{ww} = M_{ff} \tag{A-15}$$

$$\Pi^T K \Pi = \begin{bmatrix} I_{dd} & T_1^T \\ 0 & I_{ff} \end{bmatrix} \begin{bmatrix} K_{dd} & K_{df} \\ K_{fd} & K_{ff} \end{bmatrix} \begin{bmatrix} I_{dd} & 0 \\ T_1 & I_{ff} \end{bmatrix} \tag{A-16}$$

By similarity, the transformed stiffness matrix is

$$\begin{bmatrix} \hat{k}_{dd} & \hat{k}_{dw} \\ \hat{k}_{wd} & \hat{k}_{ww} \end{bmatrix} = \begin{bmatrix} K_{dd} + T_1^T K_{fd} + \left(K_{df} + T_1^T K_{ff}\right) T_1 & \left(K_{df} + T_1^T K_{ff}\right) \\ \left(K_{fd} + K_{ff} T_1\right) & K_{ff} \end{bmatrix} \tag{A-17}$$

$$\begin{bmatrix} \hat{F}_d \\ \hat{F}_w \end{bmatrix} = \begin{bmatrix} I_{dd} & T_1 \\ 0 & I_{ff} \end{bmatrix} \begin{bmatrix} F_d \\ F_f \end{bmatrix} \tag{A-18}$$

$$\begin{bmatrix} \hat{F}_d \\ \hat{F}_w \end{bmatrix} = \begin{bmatrix} I_{dd} F_d + T_1 F_f \\ I_{ff} F_f \end{bmatrix} \tag{A-19}$$

$$\begin{bmatrix} \hat{F}_d \\ \hat{F}_w \end{bmatrix} = \begin{bmatrix} F_d + T_1 F_f \\ F_f \end{bmatrix} \tag{A-20}$$

$$\begin{bmatrix} \hat{M}_{dd} & 0 \\ 0 & \hat{M}_{ww} \end{bmatrix} \begin{bmatrix} \ddot{u}_d \\ \ddot{u}_w \end{bmatrix} + \begin{bmatrix} \hat{k}_{dd} & \hat{k}_{dw} \\ \hat{k}_{wd} & \hat{k}_{ww} \end{bmatrix} \begin{bmatrix} u_d \\ u_w \end{bmatrix} = \begin{bmatrix} \hat{F}_d \\ \hat{F}_w \end{bmatrix} \tag{A-21}$$

$$\hat{M}_{ww} \ddot{u}_w + \hat{k}_{wd} u_d + \hat{k}_{ww} u_w = \hat{F}_w \tag{A-22}$$

The equation of motion is thus

$$\hat{M}_{ww}\ddot{u}_w + \hat{k}_{ww}u_w = \hat{F}_w - \hat{k}_{wd}u_d \tag{A-23}$$

The final displacement are found via

$$\begin{bmatrix} u_d \\ u_f \end{bmatrix} = \Pi \begin{bmatrix} u_d \\ u_w \end{bmatrix} \tag{A-24}$$

$$\Pi = \begin{bmatrix} I_{dd} & 0 \\ -M_{ff}^{-1}M_{fd} & I_{ff} \end{bmatrix} \tag{A-25}$$

APPENDIX B

Enforced Acceleration

Again, the partitioned equation of motion is

$$\Pi^T \begin{bmatrix} M_{dd} & M_{df} \\ M_{fd} & M_{ff} \end{bmatrix} \Pi \begin{bmatrix} \ddot{u}_d \\ \ddot{u}_w \end{bmatrix} + \Pi^T \begin{bmatrix} K_{dd} & K_{df} \\ K_{fd} & K_{ff} \end{bmatrix} \Pi \begin{bmatrix} u_d \\ u_w \end{bmatrix} = \Pi^T \begin{bmatrix} F_d \\ F_f \end{bmatrix} \tag{B-1}$$

Transform the equation of motion to uncouple the stiffness matrix so that the resulting stiffness matrix is

$$\begin{bmatrix} \hat{K}_{dd} & 0 \\ 0 & \hat{K}_{ww} \end{bmatrix} \tag{B-2}$$

$$\Pi^T K \Pi = \begin{bmatrix} I & T_1{}^T \\ 0 & T_2{}^T \end{bmatrix} \begin{bmatrix} K_{dd} & K_{df} \\ K_{fd} & K_{ff} \end{bmatrix} \begin{bmatrix} I & 0 \\ T_1 & T_2 \end{bmatrix} \tag{B-3}$$

$$\Pi^T K \Pi = \begin{bmatrix} I & T_1{}^T \\ 0 & T_2{}^T \end{bmatrix} \begin{bmatrix} K_{dd} + K_{df} T_1 & K_{df} T_2 \\ K_{fd} + K_{ff} T_1 & K_{ff} T_2 \end{bmatrix} \tag{B-4}$$

$$\Pi^T K \Pi = \begin{bmatrix} K_{dd} + K_{df} T_1 + T_1{}^T (K_{fd} + K_{ff} T) & K_{df} T_2 + T_1{}^T K_{ff} T_2 \\ T_2{}^T (K_{fd} + K_{ff} T_1) & T_2{}^T (K_{ff} T_2) \end{bmatrix} \tag{B-5}$$

$$\Pi^T K \Pi = \begin{bmatrix} K_{dd} + K_{df} T_1 + T_1^T (K_{fd} + K_{ff} T_1) & \left(K_{df} + T_1^T K_{ff}\right) T_2 \\ T_2^T (K_{fd} + K_{ff} T_1) & T_2^T (K_{ff} T_2) \end{bmatrix} \tag{B-6}$$

$$\Pi^T K \Pi = \begin{bmatrix} K_{dd} + T_1^T K_{fd} + \left(K_{df} + T_1^T K_{ff}\right) T_1 & \left(K_{df} + T_1^T K_{ff}\right) T_2 \\ T_2^T (K_{fd} + K_{ff} T_1) & T_2^T (K_{ff} T_2) \end{bmatrix} \tag{B-7}$$

Let

$$T_2 = I \tag{B-8}$$

$$\Pi^T K \Pi = \begin{bmatrix} K_{dd} + T_1^T K_{fd} + \left(K_{df} + T_1^T K_{ff}\right) T_1 & \left(K_{df} + T_1^T K_{ff}\right) \\ (K_{fd} + K_{ff} T_1) & K_{ff} \end{bmatrix} = \begin{bmatrix} \hat{K}_{dd} & 0 \\ 0 & \hat{K}_{ww} \end{bmatrix} \tag{B-9}$$

$$K_{df} + T_1^T K_{ff} = 0 \tag{B-10}$$

$$T_1^T = -K_{df} K_{ff}^{-1} \tag{B-11}$$

$$T_1 = -K_{ff}^{-1} K_{fd} \tag{B-12}$$

$$\Pi = \begin{bmatrix} I_{dd} & 0 \\ T_1 & I_{ff} \end{bmatrix} \tag{B-13}$$

$$\hat{K}_{dd} = K_{dd} + T_1^T K_{fd} + \left(K_{df} + T_1^T K_{ff}\right) T_1 \tag{B-14}$$

$$\hat{K}_{ww} = K_{ff} \tag{B-15}$$

$$\Pi^T M \Pi = \begin{bmatrix} I_{dd} & T_1^T \\ 0 & I_{ff} \end{bmatrix} \begin{bmatrix} M_{dd} & M_{df} \\ M_{fd} & M_{ff} \end{bmatrix} \begin{bmatrix} I_{dd} & 0 \\ T_1 & I_{ff} \end{bmatrix} \tag{B-16}$$

By similarity, the transformed mass matrix is

$$\begin{bmatrix} \hat{m}_{dd} & \hat{m}_{dw} \\ \hat{m}_{wd} & \hat{m}_{ww} \end{bmatrix} = \begin{bmatrix} M_{dd} + T_1^T M_{fd} + \left(M_{df} + T_1^T M_{ff}\right) T_1 & \left(M_{df} + T_1^T M_{ff}\right) \\ \left(M_{fd} + M_{ff} T_1\right) & M_{ff} \end{bmatrix} \tag{B-17}$$

$$\begin{bmatrix} \hat{F}_d \\ \hat{F}_w \end{bmatrix} = \begin{bmatrix} I_{dd} & T_1 \\ 0 & I_{ff} \end{bmatrix} \begin{bmatrix} F_d \\ F_f \end{bmatrix} \tag{B-18}$$

$$\begin{bmatrix} \hat{F}_d \\ \hat{F}_w \end{bmatrix} = \begin{bmatrix} I_{dd} F_d + T_1 F_f \\ I_{ff} F_f \end{bmatrix} \tag{B-19}$$

$$\begin{bmatrix} \hat{F}_d \\ \hat{F}_w \end{bmatrix} = \begin{bmatrix} F_d + T_1 F_f \\ F_f \end{bmatrix} \tag{B-20}$$

$$\begin{bmatrix} \hat{m}_{dd} & \hat{m}_{dw} \\ \hat{m}_{wd} & \hat{m}_{ww} \end{bmatrix} \begin{bmatrix} \ddot{u}_d \\ \ddot{u}_w \end{bmatrix} + \begin{bmatrix} \hat{K}_{dd} & 0 \\ 0 & \hat{K}_{ww} \end{bmatrix} \begin{bmatrix} u_d \\ u_w \end{bmatrix} = \begin{bmatrix} \hat{F}_d \\ \hat{F}_w \end{bmatrix} \tag{B-21}$$

$$\hat{m}_{wd}\ddot{u}_d + \hat{m}_{ww}\ddot{u}_w + \hat{K}_{ww}u_w = \hat{F}_w \tag{B-22}$$

The equation of motion is thus

$$\hat{m}_{ww}\ddot{u}_w + \hat{K}_{ww}u_w = \hat{F}_w - \hat{m}_{wd}\ddot{u}_d \tag{B-23}$$

The final displacement are found via

$$\begin{bmatrix} u_d \\ u_f \end{bmatrix} = \Pi \begin{bmatrix} u_d \\ u_w \end{bmatrix} \tag{B-24}$$

$$\Pi = \begin{bmatrix} I_{dd} & 0 \\ -K_{ff}^{-1}K_{fd} & I_{ff} \end{bmatrix} \tag{B-25}$$

APPENDIX C

Enforced Acceleration Example

The diagram of a sample system is shown in Figure 1.

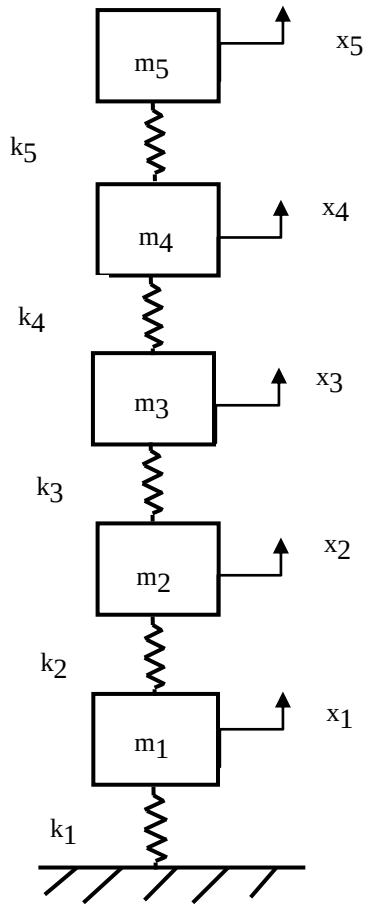

Figure C-1.

k1	10e+07
k2	10e+07
k3	8e+07
k4	8e+07
k5	6e+07

m1	65,000
m2	65,000
m3	65,000
m4	60,000
m5	45,000

English units:
stiffness (lbf/in), mass(lbf sec^2/in), force(lbf)

Assume modal damping of 5% for all modes.

The equation of motion is

$$\begin{bmatrix} m_1 & 0 & 0 & 0 & 0 \\ 0 & m_2 & 0 & 0 & 0 \\ 0 & 0 & m_3 & 0 & 0 \\ 0 & 0 & 0 & m_4 & 0 \\ 0 & 0 & 0 & 0 & m_5 \end{bmatrix} \begin{bmatrix} \ddot{x}_1 \\ \ddot{x}_2 \\ \ddot{x}_3 \\ \ddot{x}_4 \\ \ddot{x}_5 \end{bmatrix}$$

$$+ \begin{bmatrix} k_1 + k_2 & -k_2 & 0 & 0 & 0 \\ -k_2 & k_2 + k_3 & -k_3 & 0 & 0 \\ 0 & -k_3 & k_3 + k_4 & -k_4 & 0 \\ 0 & 0 & -k_4 & k_4 + k_5 & -k_5 \\ 0 & 0 & 0 & -k_5 & k_5 \end{bmatrix} \begin{bmatrix} x_1 \\ x_2 \\ x_3 \\ x_4 \\ x_5 \end{bmatrix} = \begin{bmatrix} f_1 \\ f_2 \\ f_3 \\ f_4 \\ f_5 \end{bmatrix} \tag{C-1}$$

Now set all of the applied forces f_i to zero.

Drive mass 4 with acceleration as follows:

$$a_4(t) = (386 \text{ in/sec^2}) \sin [\, 2\pi\, (4 \text{ Hz})\, t \,] , \quad 0 \le t \le 3 \text{ sec} \tag{C-2}$$

Set the sample rate at 200 samples/sec.

The results are shown in Figure C-2, as calculated by Matlab script: enforced_acceleration.m.

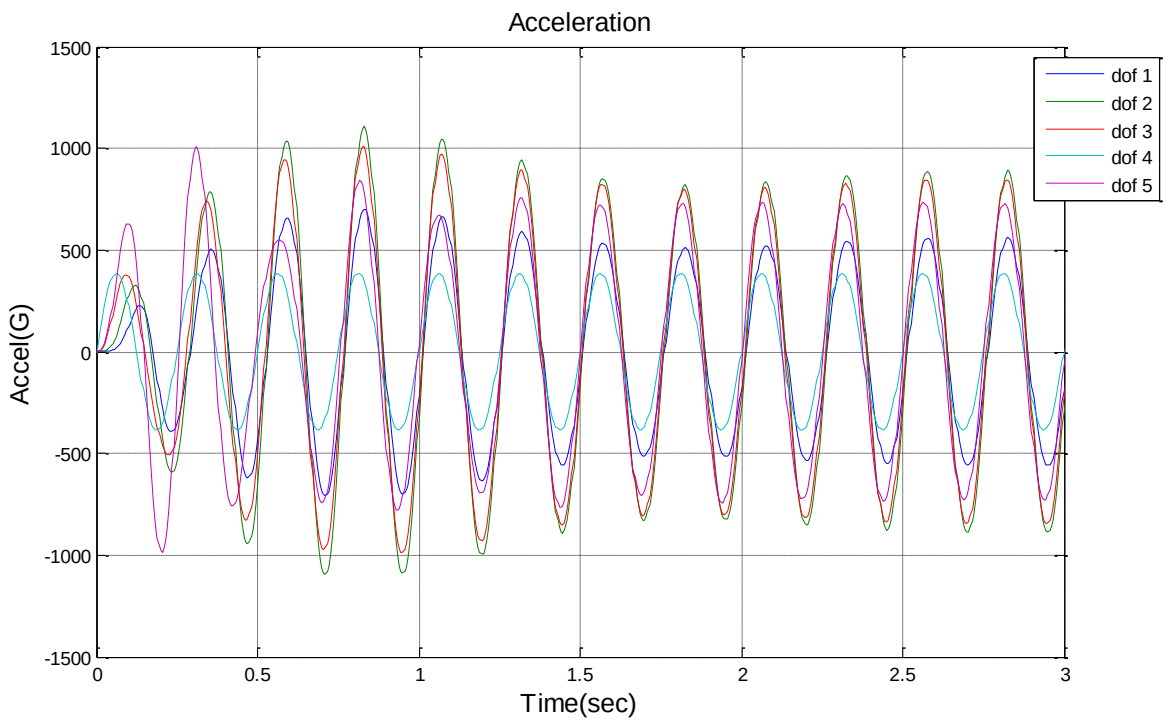

Figure C-2.

```
>> enforced_acceleration

  enforced_acceleration.m  ver 2.1  March 9, 2011
  by Tom Irvine

 Enter the units system
 1=English  2=metric
 1
 Assume symmetric mass and stiffness matrices.
 Select input mass unit
  1=lbm  2=lbf sec^2/in
 2
 stiffness unit = lbf/in

 Select file input method
   1=file preloaded into Matlab
   2=Excel file
1

 Mass Matrix
 Enter the matrix name:  mass_5dof
```

```
 Stiffness Matrix
 Enter the matrix name:  stiff_5dof
 Input Matrices

mass =

       65000           0           0           0           0
           0       65000           0           0           0
           0           0       65000           0           0
           0           0           0       60000           0
           0           0           0           0       45000


stiff =

   200000000  -100000000           0           0           0
  -100000000   180000000   -80000000           0           0
           0   -80000000   160000000   -80000000           0
           0           0   -80000000   140000000   -60000000
           0           0           0   -60000000    60000000

 Select modal damping input method
  1=uniform damping for all modes
  2=damping vector
 1

 Enter damping ratio
 0.05

 number of dofs =5


 Enter the starting time (sec)
 0

 Enter the end time (sec)
 10

 Enter the sample rate (samples/sec)
 200

 Enter the number of dofs with enforced acceleration. (maximum = 4)
 1

 Each input file must have two columns: time & acceleration

 Enter the first dof
 4
 The input file must have:  time(sec) & accel
 Enter the applied acceleration input matrix name for this dof.
sine
```

```
MT =

  1.0e+005 *

    1.5495    0.1444    0.2889    0.4694    0.4500
    0.1444    0.6500         0         0         0
    0.2889         0    0.6500         0         0
    0.4694         0         0    0.6500         0
    0.4500         0         0         0    0.4500


KT =

  1.0e+008 *

    0.2222    0.0000   -0.0000         0   -0.0000
    0.0000    2.0000   -1.0000         0         0
   -0.0000   -1.0000    1.8000   -0.8000         0
         0         0   -0.8000    1.6000         0
   -0.0000         0         0         0    0.6000

 Natural Frequencies
 No.      f(Hz)
1.        1.8283
2.        4.9465
3.        7.4613
4.        9.7491
5.        11.171

  Modes Shapes (column format)

ModeShapes =

    0.0023   -0.0008   -0.0016   -0.0027   -0.0011
    0.0002    0.0018    0.0023   -0.0013    0.0024
    0.0002    0.0026    0.0018    0.0020   -0.0021
    0.0002    0.0018   -0.0008    0.0036    0.0026
    0.0003   -0.0020    0.0040    0.0041    0.0015



Mwd =

  1.0e+004 *

    1.4444
    2.8889
    4.6944
    4.5000
```

```
Mww =

       65000           0           0           0
           0       65000           0           0
           0           0       65000           0
           0           0           0       45000


Kww =

   200000000  -100000000           0           0
  -100000000   180000000   -80000000           0
           0   -80000000   160000000           0
           0           0           0    60000000

 Natural Frequencies
 No.      f(Hz)
1.        4.5268
2.        5.8115
3.        8.2749
4.        11.021

  Modes Shapes (column format)

ModeShapes =

    0.0019         0    0.0024    0.0024
    0.0028         0    0.0006   -0.0027
    0.0021         0   -0.0030    0.0014
         0    0.0047         0         0

 Participation Factors

part =

  435.2223
  212.1320
    0.9398
   74.7038
```

APPENDIX D

Enforced Displacement Example

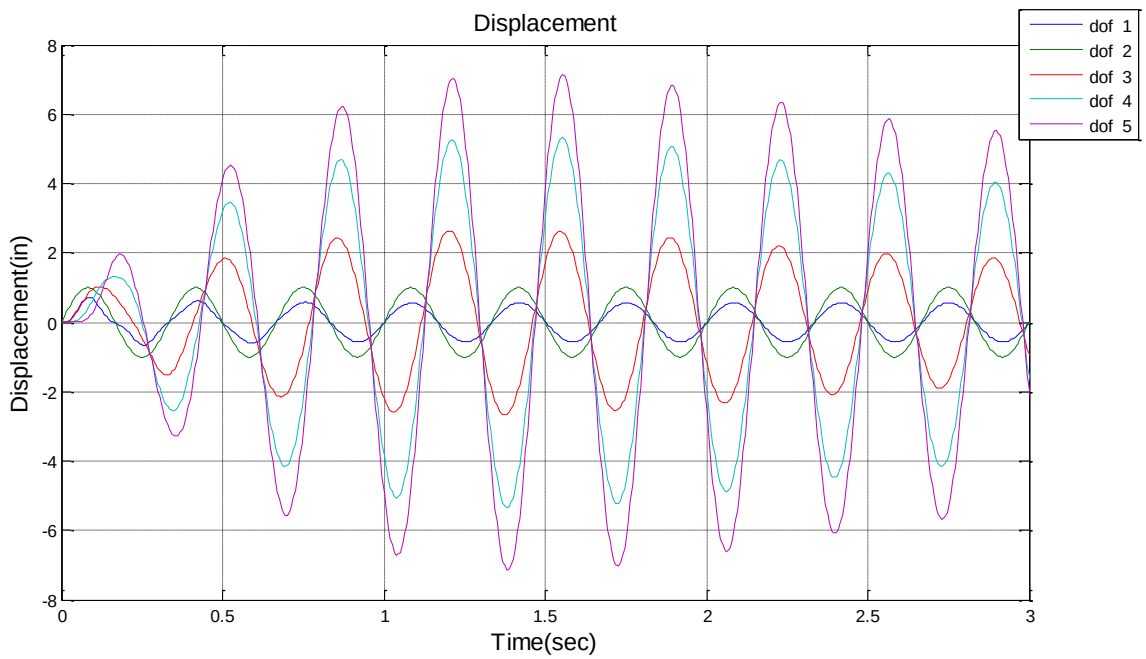

Figure D-1.

Consider the spring-mass system from Appendix C.

Drive mass 2 with displacement as follows:

$$d_2(t) = (1 \text{ inch}) \sin [\, 2\pi\, (3 \text{ Hz})\, t \,] , \quad 0 \leq t \leq 3 \text{ sec} \qquad \text{(D-1)}$$

The results are shown in Figure D-1, as calculated by Matlab script: enforced_displacement.m.

```
>> enforced_displacement

  enforced_displacement.m  ver 1.5  March 9, 2011
  by Tom Irvine

 Enter the units system
 1=English  2=metric
 1
 Assume symmetric mass and stiffness matrices.
 Select input mass unit
  1=lbm  2=lbf sec^2/in
 2
 stiffness unit = lbf/in

 Select file input method
   1=file preloaded into Matlab
   2=Excel file
1

 Mass Matrix
 Enter the matrix name:  mass_5dof

 Stiffness Matrix
 Enter the matrix name:  stiff_5dof
 Input Matrices

mass =

       65000           0           0           0           0
           0       65000           0           0           0
           0           0       65000           0           0
           0           0           0       60000           0
           0           0           0           0       45000


stiff =

   200000000  -100000000           0           0           0
  -100000000   180000000   -80000000           0           0
           0   -80000000   160000000   -80000000           0
           0           0   -80000000   140000000   -60000000
           0           0           0   -60000000    60000000

 Select modal damping input method
  1=uniform damping for all modes
  2=damping vector
 1

 Enter damping ratio
 0.05

 number of dofs =5
```

```
 Enter the starting time (sec)
 0

 Enter the end time (sec)
 5

 Enter the sample rate (samples/sec)
 200

 Enter the number of dofs with enforced displacement. (maximum = 4)
 1

 Each input file must have two columns: time & displacement

 Enter the first dof
 2
 The input file must have:  time(sec) & disp(inch)
 Enter the applied displacement input matrix name for this dof.
sine

MT =

       65000           0           0           0           0
           0       65000           0           0           0
           0           0       65000           0           0
           0           0           0       60000           0
           0           0           0           0       45000


KT =

   180000000  -100000000   -80000000           0           0
  -100000000   200000000           0           0           0
   -80000000           0   160000000   -80000000           0
           0           0   -80000000   140000000   -60000000
           0           0           0   -60000000    60000000

 Natural Frequencies
 No.      f(Hz)
1.        1.8283
2.        4.9465
3.        7.4613
4.        9.7491
5.        11.171
```

```
  Modes Shapes (column format)

ModeShapes =

    0.0013    0.0023    0.0011   -0.0008   -0.0025
    0.0007    0.0017    0.0020    0.0019    0.0021
    0.0019    0.0013   -0.0020   -0.0017    0.0018
    0.0023   -0.0008   -0.0016    0.0027   -0.0011
    0.0026   -0.0027    0.0024   -0.0015    0.0004



Kwd =

  -100000000
   -80000000
           0
           0


Kww =

   200000000           0           0           0
           0   160000000   -80000000           0
           0   -80000000   140000000   -60000000
           0           0   -60000000    60000000


Mww =

       65000           0           0           0
           0       65000           0           0
           0           0       60000           0
           0           0           0       45000

 Natural Frequencies
 No.      f(Hz)
1.        2.7278
2.        6.9133
3.        8.8283
4.        9.9997

  Modes Shapes (column format)

ModeShapes =

         0         0    0.0039         0
    0.0014    0.0027         0    0.0024
    0.0025    0.0013         0   -0.0029
    0.0033   -0.0031         0    0.0015
```

```
 Participation Factors

part =

  392.7638
  115.3874
  254.9510
   49.2174
```